THE REPRODUCTION, DISTRIBUTION AND UTILIZATION OF THIS DOCUMENT AS WELL AS THE COMMUNICATION OF IT'S CONTENTS TO OTHERS WITHOUT EXPRESS AUTHORIZATION BY ONVIO, LLC IS PROHIBITED. OFFENDERS WILL BE HELD LIABLE FOR THE PAYMENT OF DAMAGES. ALL RIGHTS RESERVED IN THE EVENT OF THE GRANT OF A PATENT, UTILITY MODEL OR DESIGN.

REVISIONS				
ZONE	REV.	DESCRIPTION	DATE	APPROVED
	A	INITIAL RELEASE	10/7/2019	BSL

RATIOS

A NEGATIVE RATIO INDICATES THAT THE OUTPUT SHAFT ROTATES OPPOSITE THE INPUT SHAFT

+10
+12
+15
+16
-24
+25
-27
+28
+32
+33
-39
+40
-44
-54
-55
-64
+65
-77
+78
-90
+91
+100
-104
+105
-120
+121
-143
+144
-168
+169
-195
+196
-224
+225

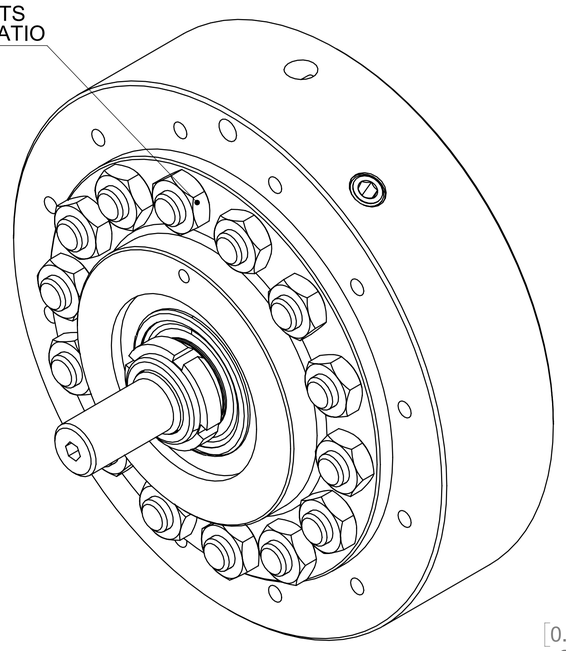

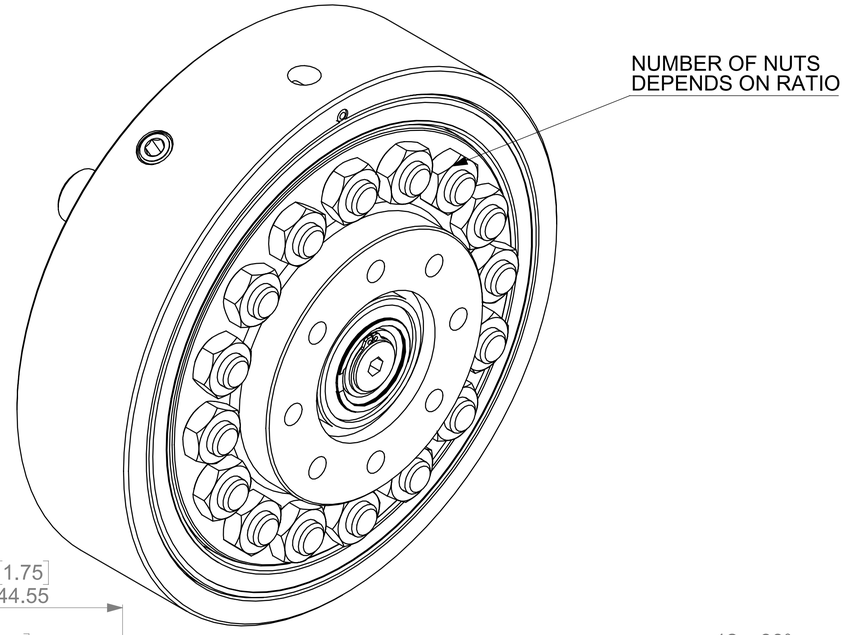

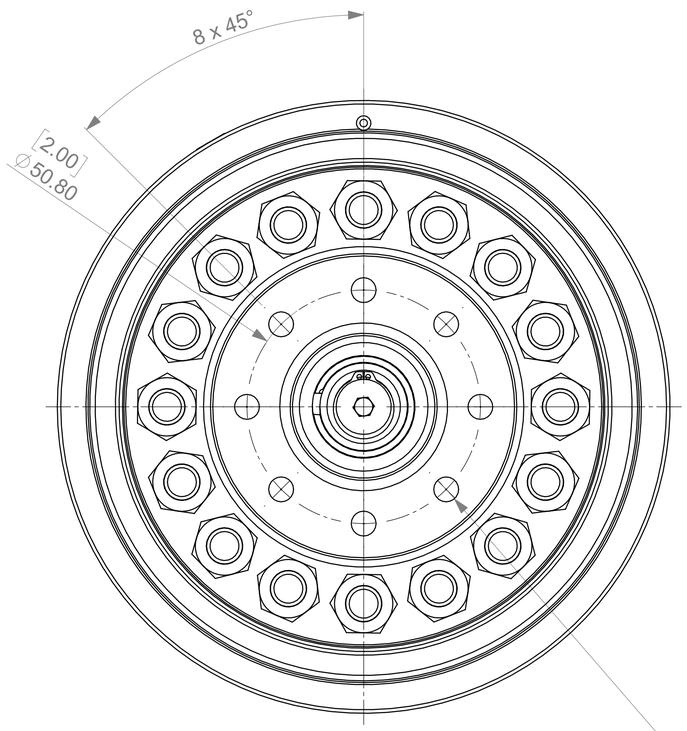

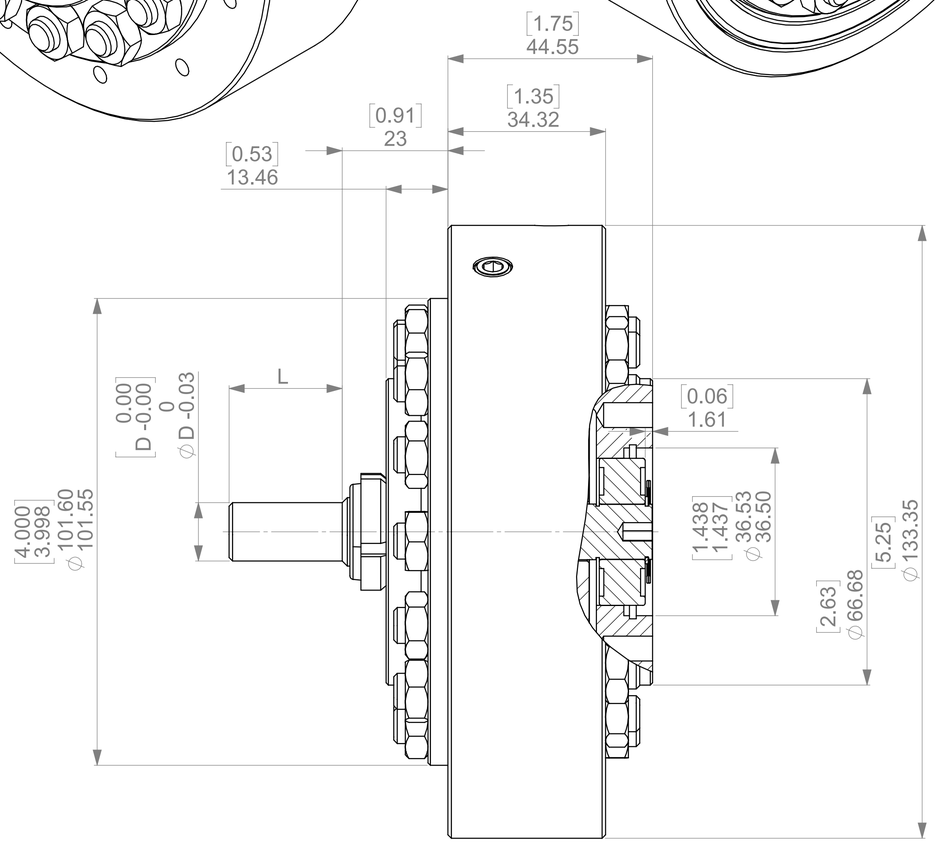

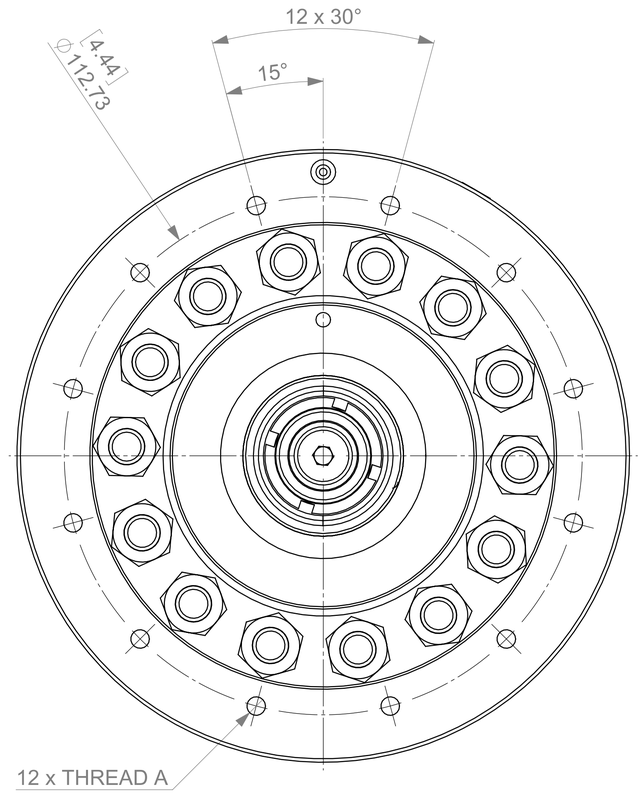

WEIGHT
4.0 Kg
8.8 Lb

Ra 1.6 ( )

DRAWN BY: BSL	DATE: 07OCT19	SCALE: 3:2	onvio	
CHECKED BY:	DATE:	UNSPECIFIED TOLERANCES PER ISO 2768 m K	MATERIAL:	FINISH:
APPROVED BY:	DATE:		HEAT TREAT:	
ALL DIMENSIONS IN MILLIMETERS		UNSPECIFIED EDGES PER ISO 13715 -0.4 -0.3 / +0.3 +0.2	M03, i=XXX, Family Variations, Stub Shaft Input	
PAPER SIZE A1	DOCUMENT TYPE DET	LANGUAGE CODE EN	SHEET NUMBER 1/2	PART NUMBER DN03XXXXXXSXXX	REVISION A

THE REPRODUCTION, DISTRIBUTION AND UTILIZATION OF THIS DOCUMENT AS WELL AS THE COMMUNICATION OF IT'S CONTENTS TO OTHERS WITHOUT EXPRESS AUTHORIZATION BY ONVIO, LLC IS PROHIBITED. OFFENDERS WILL BE HELD LIABLE FOR THE PAYMENT OF DAMAGES. ALL RIGHTS RESERVED IN THE EVENT OF THE GRANT OF A PATENT, UTILITY MODEL OR DESIGN.

CONFIGURATION DESCRIPTION
DN03RRRFTLS0000

NOTE
STANDARD SHAFT DIMENSIONS SHOWN
OTHER SHAFT DIAMETERS AND LENGHTS AVALIBLE
MAXIMUM DIAMETER "D" 13.5mm [0.532in]
MAXIMUM LENGHT "L" 78mm [3.075in]
CONTACT ONVIO FOR MORE INFORMATION

RRR

VALUE	GEAR RATIO
010	+10
012	+12
015	+15
016	+16
024	-24
025	+25
027	-27
028	+28
032	+32
033	+33
039	-39
040	+40
044	-44
054	-54
055	-55
064	-64
065	+65
077	-77
078	+78
090	-90
91	+91
100	+100
104	-104
105	+105
120	-120
121	121
143	-143
144	144
168	-168
169	169
195	-195
196	196
224	-224
225	225

L

VALUE	LUBRICATION
0	STANDARD
1	LOW TEMPERATURE
2	HIGHT TEMPERATURE
8	VACUUM
9	FOOD GRADE

T

VALUE	THREAD A	THREAD B	DIAMETER D	LENGTH L
E	#10-32 ↧ 0.44"	1/4-28 ↧ 0.38"	0.50in	1.00in
M	M5x0.8 ↧ 11mm	M6x1.0 ↧ 6.3mm	12mm	25mm

F

VALUE	HOUSING FINISH
B	BLACK OXIDE
N	NICKEL

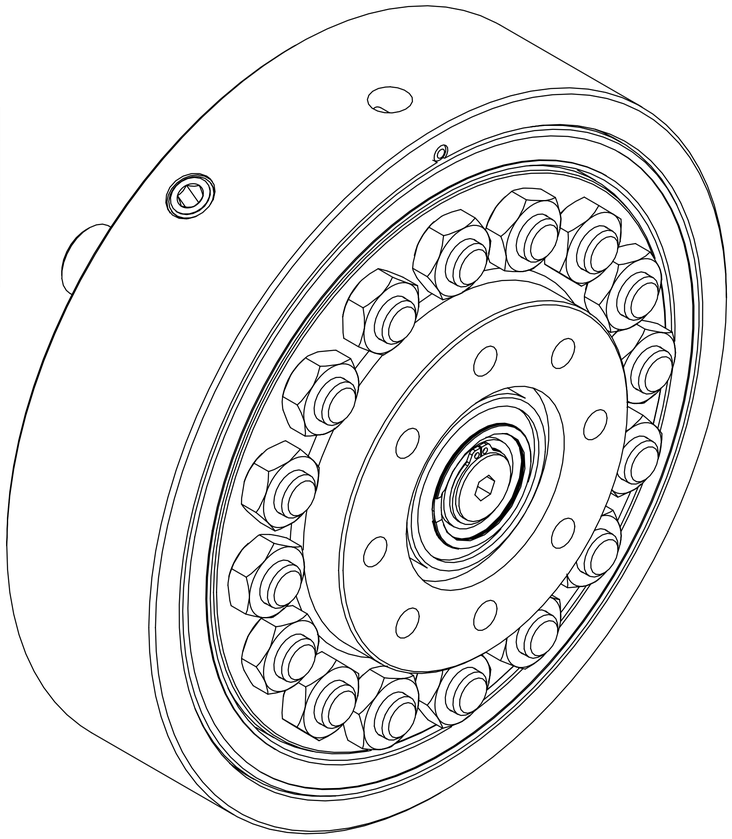

DRAWN BY: BSL	DATE: 07OCT19	SCALE: 2:1	onvio
CHECKED BY:	DATE:	UNSPECIFIED TOLERANCES PER ISO 2768 m K	MATERIAL: / FINISH:
APPROVED BY:	DATE:	UNSPECIFIED EDGES PER ISO 13715 -0.4 -0.3 / +0.3 +0.2	HEAT TREAT:
ALL DIMENSIONS IN MILLIMETERS			M03, i=XXX, Family Variations, Stub Shaft Input
PAPER SIZE A1	DOCUMENT TYPE DET	LANGUAGE CODE EN	SHEET NUMBER 2/2
PART NUMBER DN03XXXXXXSXXX	REVISION A		